SERVICE PARTS LIST

BULLETIN NO.
54-05-0165

SPECIFY CATALOG NO. AND SERIAL NO. WHEN ORDERING PARTS				REVISED BULLETIN	DATE
M18 FUEL™ 9 GALLON Dual-Battery Wet/Dry Vacuum					June 2023
CATALOG NO.	**0920-20**	STARTING SERIAL NO.	**M53A**	WIRING INSTRUCTION	**See page 3**

00 | 0 **EXAMPLE:**
Component Parts (Small #) Are Included
When Ordering The Assembly (Large #).

FIG.	PART NO.	DESCRIPTION OF PART	NO. REQ.
18	49-90-1996	Hose Assembly	(1)
35	45-06-0589	Tank Handle	(2)
36	05-74-1044	M4 x 12mm Flange T-15 Screw	(10)
37	----------	9 Gallon Tank (See item 73)	(1)
38	44-85-0253	Tank Foot #2	(2)
39	42-16-2700	Bag Holder Attachment	(1)
40	42-16-2705	Bag Holder Screw-In Attachment	(1)
41	44-85-0252	Tank Foot #1	(2)
42	31-01-3035	Drain Cap	(1)
43	49-90-1987	Wand (Includes 1)	(2)
44	49-90-1988	Crevice Tool	(1)
46	14-04-0130	Caster	(4)
47	49-90-2011	Floor Utility Nozzle	(1)
48	----------	Cart Base	(1)
49	40-50-3925	Spring	(1)
50	44-66-7050	Pedal Cover	(1)
51	45-24-3100	Pedal	(1)
53	05-74-1012	8-18 x 16mm Hi-Lo T-15 Screw	(2)
72	0923-20	Cart Base Assembly	(1)
73	0912-20	9 Gallon Tank Assembly	(1)

See page two for 0921-20 Head Assembly service parts

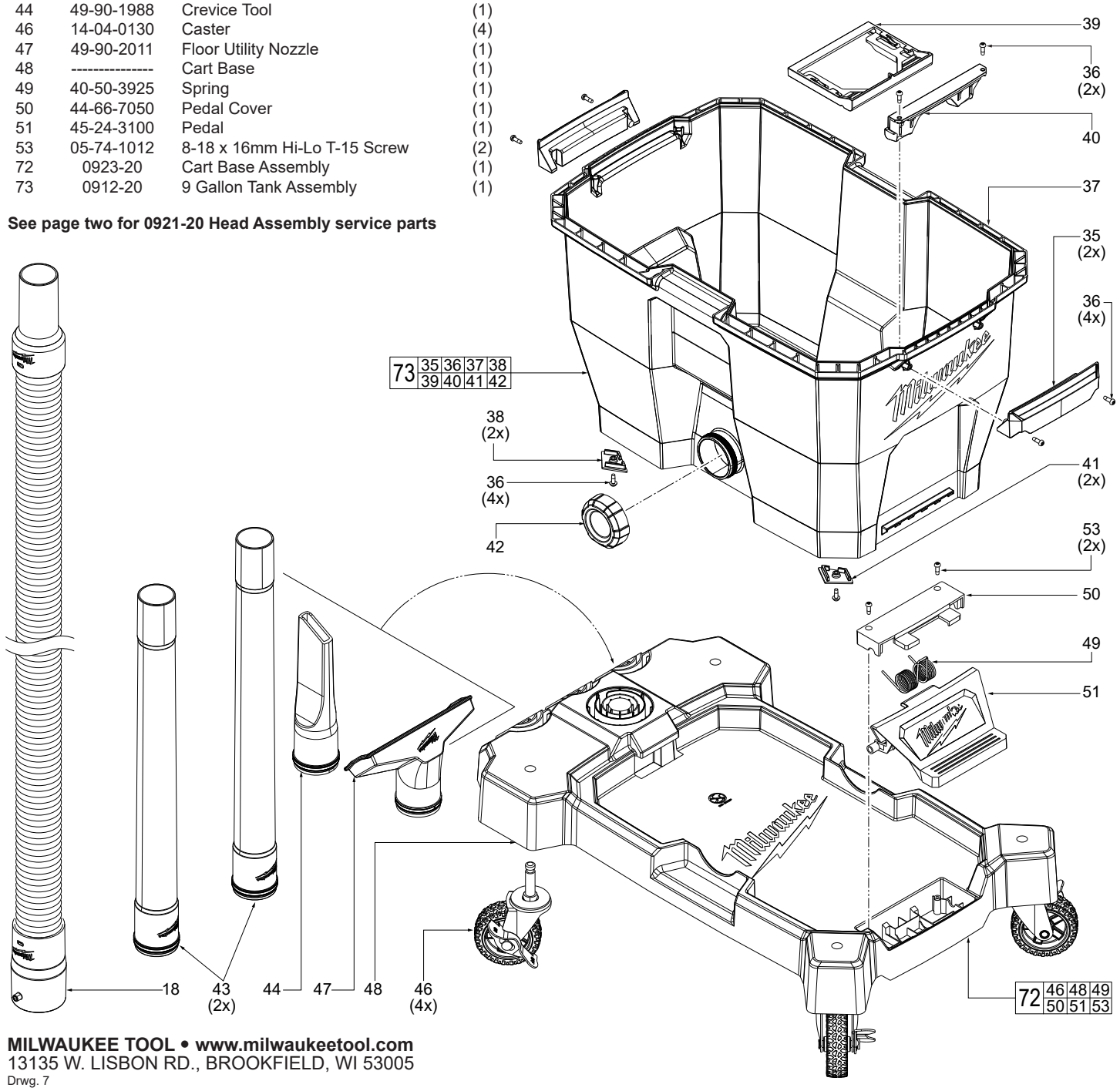

MILWAUKEE TOOL • www.milwaukeetool.com
13135 W. LISBON RD., BROOKFIELD, WI 53005
Drwg. 7

FIG.	PART NO.	DESCRIPTION OF PART	NO. REQ.
1	31-44-7015	Carrying Handle	(1)
2	31-17-0520	Hose Clip for 1.875" Hose	(1)
4	45-58-0285	Mounting Cleat (Set of 1)	(4)
5	14-37-0185	Bungee Hose Strap	(1)
6	31-01-3052	Head	(1)
7	42-28-0560	Bungee Holder	(1)
8	58-95-0075	Foam, Head	(1)
9	31-70-0170	Hose Rest Bracket	(1)
10	31-44-7017	Knurled Pin	(2)
11	31-01-3020	Battery Terminal Cap	(2)
16	05-74-1042	#7-18 x 19mm Plastite T-20 Screw	(8)
17	28-09-2701	Electronics Assembly	(1)
17a	----------	PCBA	(1)
17b	----------	On-Off Switch	(1)
17c	----------	Battery Terminal Block	(2)
19	31-05-0735	Exhaust Port	(1)
20	31-01-3030	Exhaust Cover	(1)
22	43-33-0480	Inlet Elbow	(1)
23	31-01-1009	Mid-Frame	(1)
24	44-66-5364	Motor Isolator-Upper	(1)
25	45-06-0585	Tank Buckle	(2)
26	31-50-9005	Motor Assembly	(1)
27	31-55-0245	Motor Isolator-Lower	(1)
28	----------	Lower Volute	(1)
29	45-06-0587	Mid-Frame Gasket	(1)
30	----------	Lower Volute Filter Seal	(1)
31	05-74-1011	8-18 x 12mm Hi-Lo T-15 Screw	(57)
32	----------	Ball Float	(1)
33	----------	Ball Float Cage	(1)
34	49-90-1978	Large Wet/Dry Vacuum High Efficiency Filter	(1)
52	45-56-0033	Motor Ground Strap	(1)
53	05-74-1012	8-18 x 16mm Hi-Lo T-15 Screw	(12)
54	22-56-0061	Y-Strap	(1)
70a	31-44-0461	Battery Housing with Left Rail	(1)
70b	31-44-0462	Battery Housing with Right Rail	(1)
74	0921-20	Head Assembly	(1)
75	31-15-1987	Lower Volute/Float Cage Assembly	(1)
	49-90-1989	Fleece Dust Bags (Pkg. of 5) (Not Included)	(1)
	12-20-0542	Service Nameplate (Not Shown)	(1)

0910-20
M18™ FUEL™ 6 Gallon Wet/Dry Vacuum
Consists of the following:
1.875" Hose and Attachments
0911-20 Motor Head Assembly (1 Battery)
0922-20 6 Gallon Tank Assembly
0923-20 Base Cart Assembly

0920-20
M18™ FUEL™ 9 Gallon Wet/Dry Vacuum
Consists of the following:
1.875" Hose and Attachments
0921-20 Motor Head Assembly (2 Batteries)
0912-20 9 Gallon Tank Assembly
0923-20 Base Cart Assembly

0930-20
M18™ FUEL™ 12 Gallon Wet/Dry Vacuum
Consists of the following:
2.5" Hose and Attachments
0921-20 Motor Head Assembly (2 Batteries)
0932-20 12 Gallon Tank Assembly
0933-20 Premium Cart Assembly

NOTE:
Motor Head Assemblies, Tank Assemblies and Cart Assemblies listed above are all interchangeable. The 120V AC Motor Head Assembly 0931-20 is also interchangeable with the tank and cart assemblies.

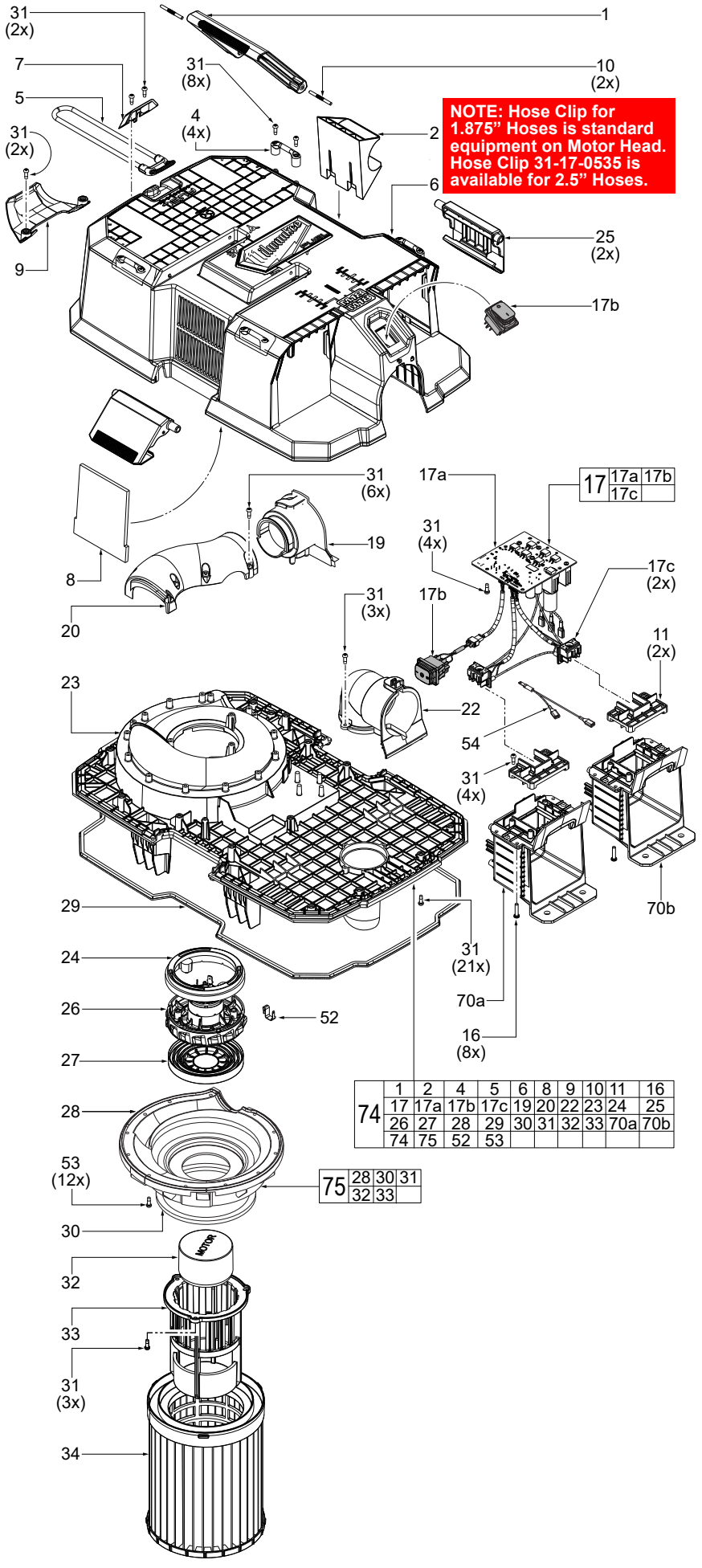

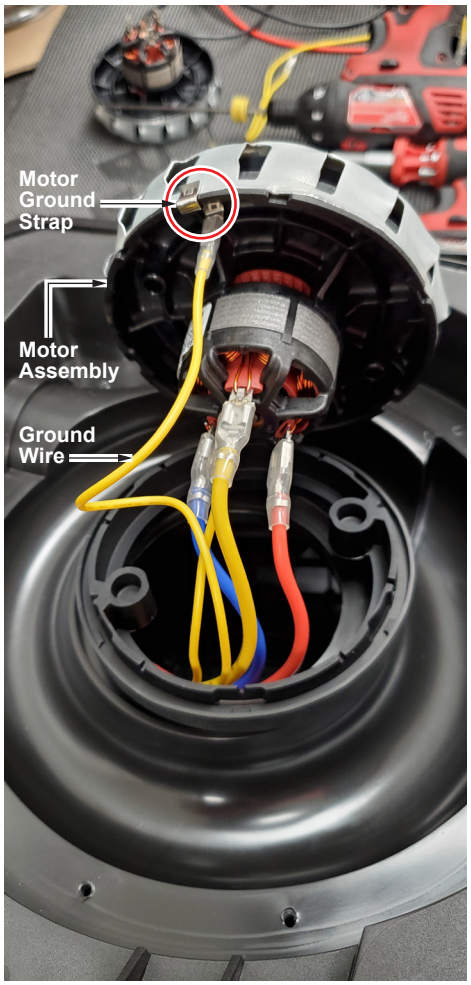

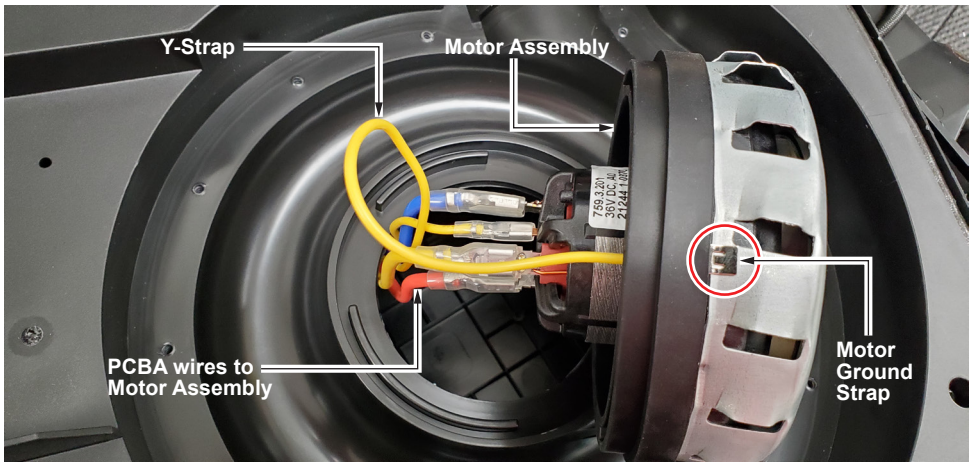

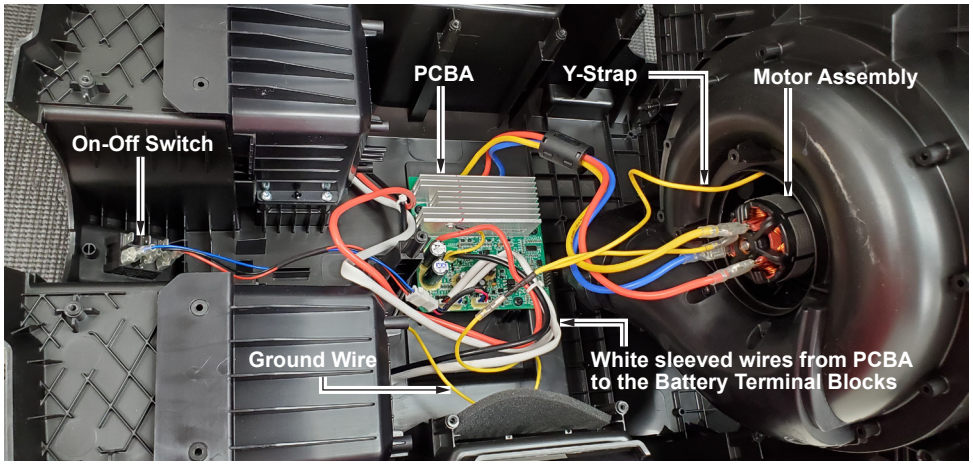

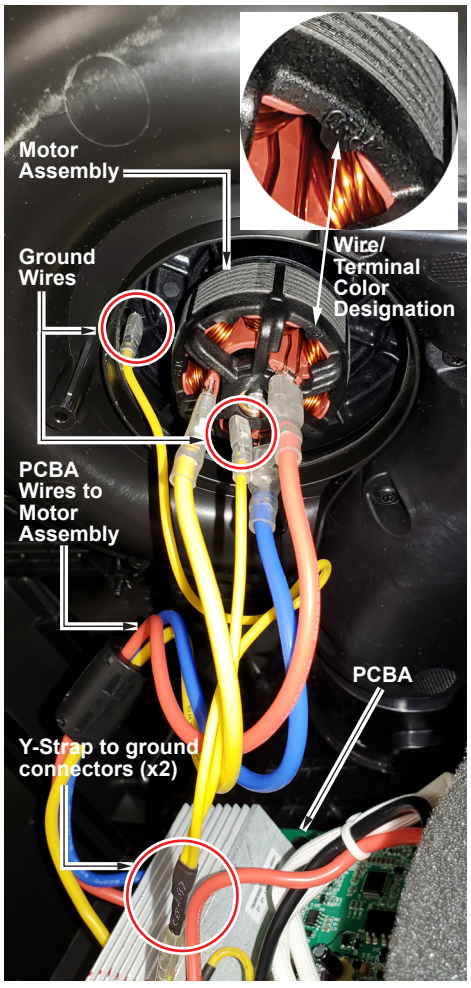

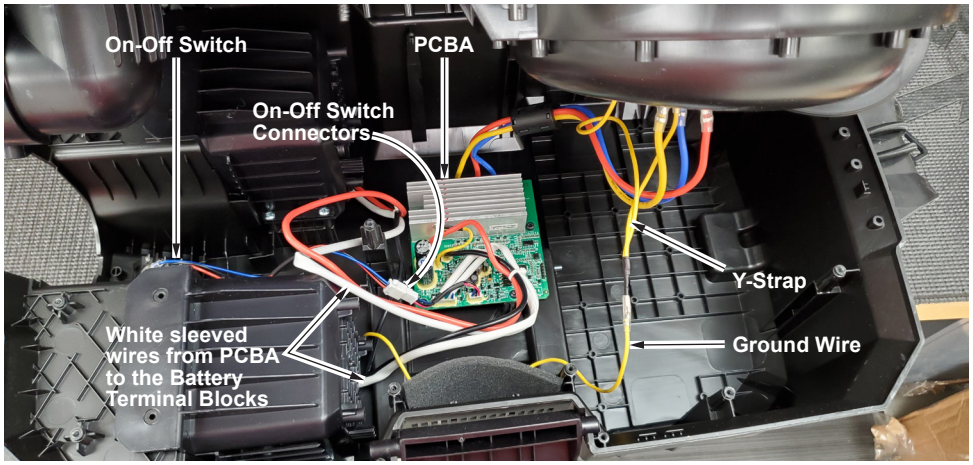

- Connect Yellow Ground PCBA wire to Y-strap. Connect Y-strap to Motor Ground Strap and motor ground terminal/tab.
- Connect Red PCBA wire to terminal labeled RED on the motor.
- Connect Yellow PCBA wire to terminal labeled YLW on the motor.
- Connect Blue PCBA wire to terminal abeled BLU on the motor.
- Pull on all wires terminated at the motor to ensure proper connection.
- Join PCBA wires and On-Off Switch wires by inserting connector ends together.

As an aid to reassembly, take notice of wire routings and position in wire guides and traps while dismantling tool.

Be sure that all components of electronics kit are seated firmly and squarely in housing recesses.

Avoid pinched wires, be sure that all wires and sleeves are pressed completely down in wire traps.

Prior to securing mid-frame onto the head, be sure that there are no interferences.

Before installing the battery, check for proper functionality of switch.

Install battery and depress switch triggers to assure tool is operating properly.