SERVICE PARTS LIST

BULLETIN NO. 54-38-2201

SPECIFY CATALOG NO. AND SERIAL NO. WHEN ORDERING PARTS			REVISED BULLETIN	DATE
4.5" COMPACT ANGLE GRINDER with PADDLE SWITCH with lock-on			54-38-2200	Mar. 2016
CAT. NO. 6146-30	STARTING SERIAL NUMBER	D02B	WIRING INSTRUCTION	See Reverse Side

FIG.	PART NO.	DESCRIPTION OF PART	NO. REQ.
1	05-88-1650	M4 x 25mm Pan Hd. ST Screw T-20	(4)
2	42-62-0120	Side Handle Assembly	(1)
3	14-30-1155	Gearcase Assembly	(1)
3a	----------	Spindle Lock Button	(1)
3b	----------	Spindle Lock Spring	(1)
3c	----------	Gearcase	(1)
3d	----------	O-Ring	(1)
3e	----------	Spindle Lock Pin	(1)
3f	----------	Needle Bearing	(1)
3g	02-04-0620	Ball Bearing	(1)
4	34-40-0560	O-Ring	(1)

★ = **Part number change** from previous service parts list.

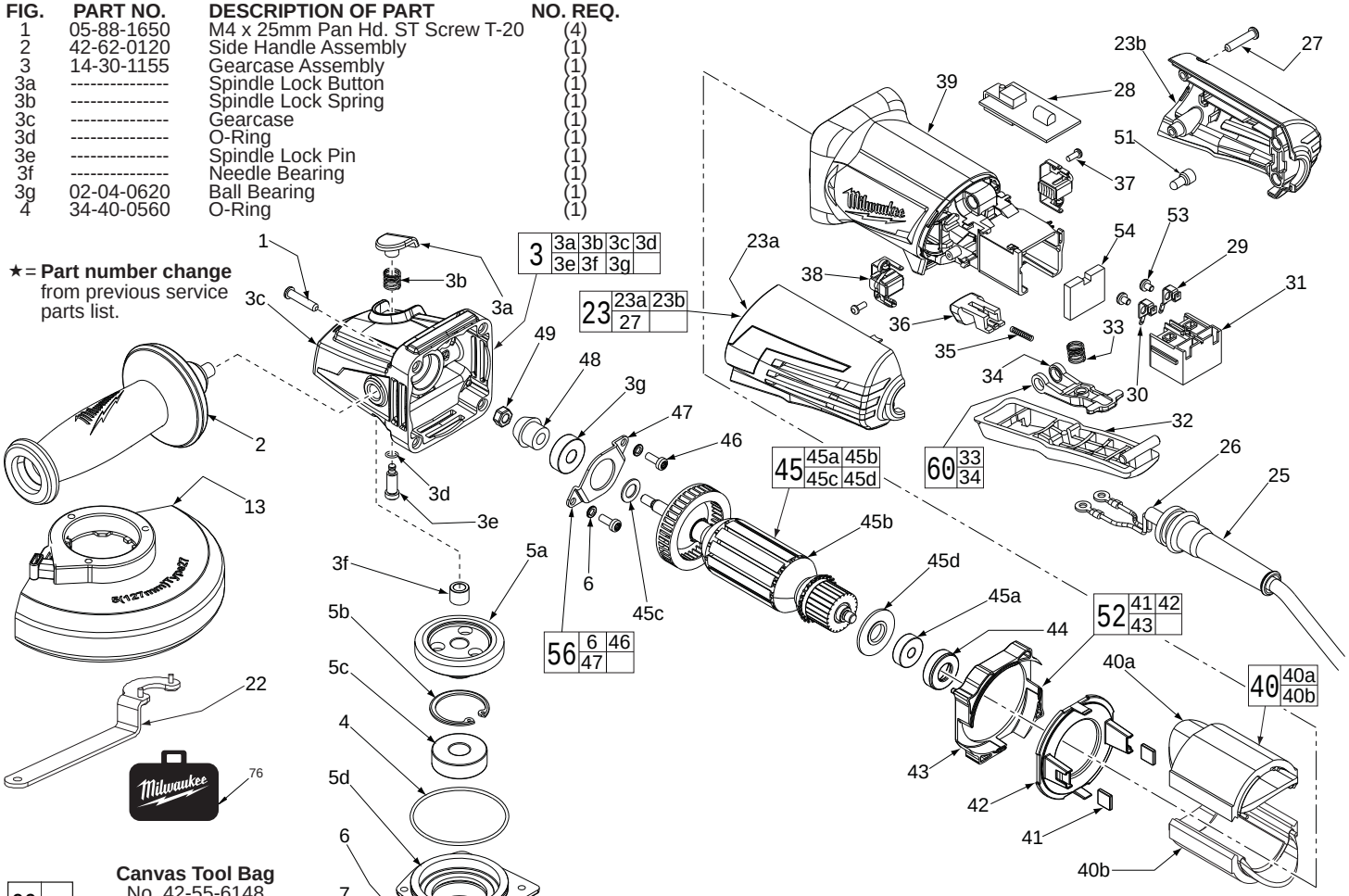

Canvas Tool Bag
No. 42-55-6148

00 0

EXAMPLE:
Component Parts (Small #) Are Included When Ordering The Assembly (Large #).

***LUBRICATION NOTE:**
When servicing the Gears (5a & 48) or the Gearcase (3c), 90-95% of the old grease must be removed prior to new grease being added.

FIG.	LUBRICATION*
5a,48	Type "Y" Grease, No. 49-08-5270, Must Be Applied To All Gear Teeth.

FIG.	PART NO.	DESCRIPTION OF PART	NO. REQ.
★ 5	14-46-0417	5/8" Spindle Hub Kit	(1)
★ 5a	----------	Spiral Bevel Gear	(1)
5b	----------	Retaining Ring	(1)
5c	----------	Ball Bearing	(1)
5d	----------	Spindle Hub	(1)
5e	----------	5/8" Spindle	(1)
6	05-90-0225	Spring Washer	(6)
7	05-88-1210	M4 x 14mm Pan Hd. Mach. Screw T-20	(4)
13	14-32-0210	4.5" Type 27 Guard Assembly (Shown)	(1)
13	43-54-0920	4.5" Type 1 Guard Assy. (Not Shown)	(1)
15	----------	O-Ring	(1)
16	----------	Wavey Spring	(1)
17	----------	Flange with Ramps	(1)
18	----------	Retaining Ring	(1)
19	43-34-0935	Inner Disc Flange	(1)
21	44-40-0035	Outer Flange Nut	(1)
22	49-96-7205	Spanner Wrench	(1)
23	14-34-6100	Rear Handle Set	(1)
23a	----------	Left Handle Halve	(1)
23b	----------	Right Handle Halve	(1)
25	44-76-0095	Cord Protector	(1)
26	22-64-3430	Power Cord	(1)

FIG.	PART NO.	DESCRIPTION OF PART	NO. REQ.
27	05-88-1300	M4 x 28mm Pan Hd. ST Screw T-20	(4)
28	22-09-1820	PCB Assembly	(1)
29	23-74-1620	Terminal	(1)
30	23-74-1615	Terminal	(1)
31	23-66-2665	On-Off Switch	(1)
32	31-92-0255	Paddle Trigger	(1)
33	----------	Paddle Trigger Spring	(1)
34	----------	Paddle Linkage	(1)
35	40-50-1155	Lock Button Spring	(1)
36	42-42-0495	Lock-On Button	(1)
37	05-88-0030	M3 x 8.5mm Pan Hd. ST Screw T-10	(2)
38	22-18-2240	Carbon Brush Assembly (Set of 2)	(1)
39	31-50-0685	Motor Housing	(1)
40	18-07-0315	Field Assembly	(1)
40a	----------	Field Halve	(1)
40b	----------	Field Halve	(1)
41	42-28-0085	Rubber Block	(2)
42	----------	Baffle Foot	(1)
43	----------	Baffle	(1)
44	42-96-0016	Rubber Bearing Cap	(1)
45	16-10-0850	Armature Assembly	(1)
45a	02-04-2110	Ball Bearing	(1)
45b	----------	Armature	(1)
45c	45-88-0406	Washer	(1)
45d	31-86-0090	Plastic Disc	(1)
46	05-88-1280	M4 x 10mm Pan Hd. Mach. Screw T-20	(2)
47	44-86-0155	Bearing Retainer	(1)
★ 48	----------	Pinion	(1)
49	05-55-0620	M5 Hex Nut	(1)
50	14-46-6105	Flange with Ramps Assembly	(1)
51	22-56-0150	Close End Connector	(1)
52	42-14-0520	Baffle Assembly	(1)
53	05-78-0305	M3.5 x 7mm Pan Hd. Phil. Switch Scr.	(2)
54	23-16-0075	Foam Block	(1)
55	12-20-1560	Service Nameplate (Not Shown)	(1)
56	44-86-0145	Bearing Retaining Plate Assembly	(1)
60	14-46-6100	Paddle Linkage/Spring Service Kit	(1)

MILWAUKEE ELECTRIC TOOL CORPORATION
13135 W. Lisbon Road, Brookfield, WI 53005

Drwg. 2

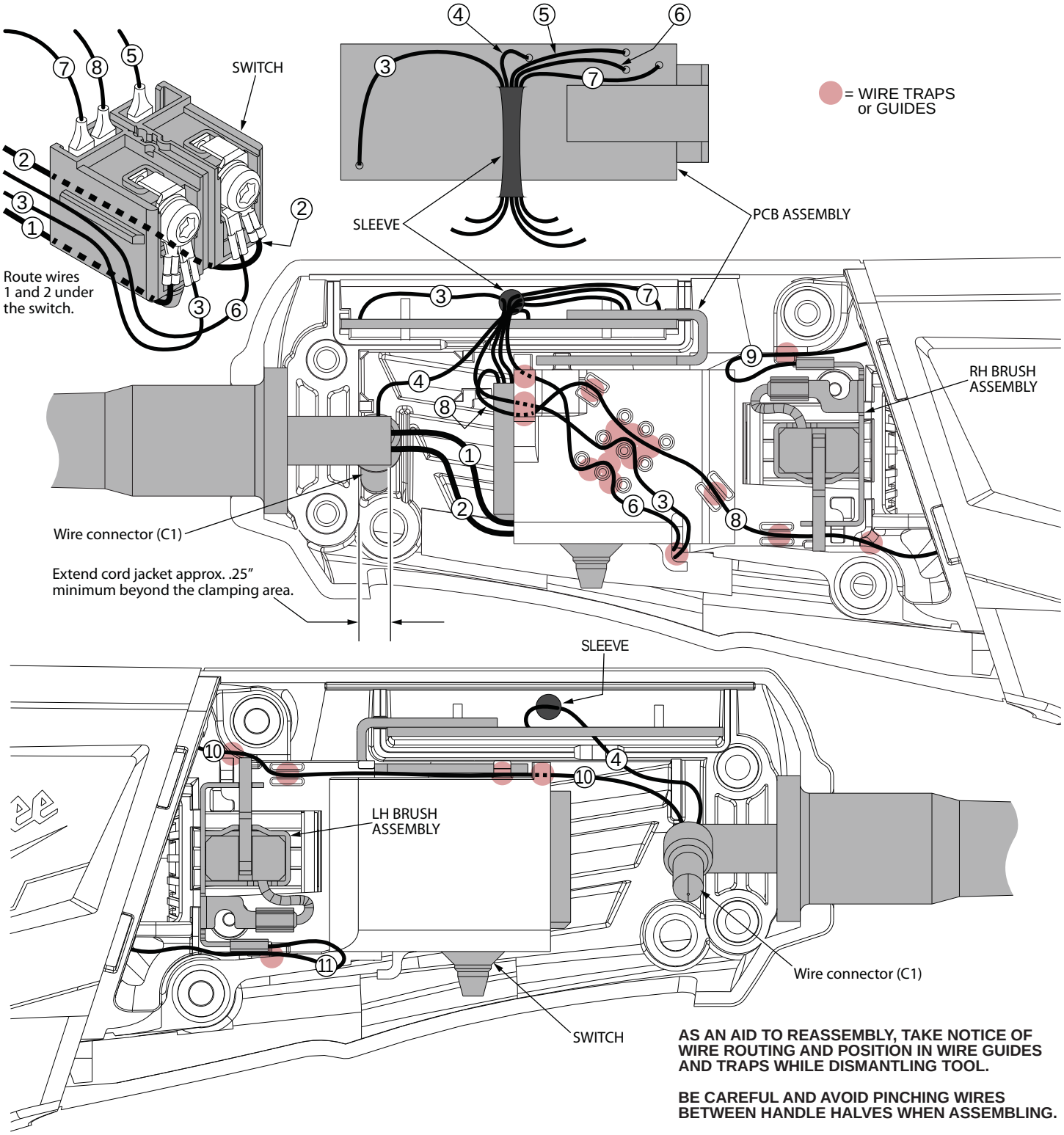

AS AN AID TO REASSEMBLY, TAKE NOTICE OF WIRE ROUTING AND POSITION IN WIRE GUIDES AND TRAPS WHILE DISMANTLING TOOL.

BE CAREFUL AND AVOID PINCHING WIRES BETWEEN HANDLE HALVES WHEN ASSEMBLING.

WIRING SPECIFICATIONS

Wire No.	Wire Color	Origin or Part No.	Gauge	Length	Terminals, Connectors and End Wire Preparation
1	Black	22-64-3430	--	--	Component of Cord Set. Connect to Switch.
2	White	22-64-3430	--	--	Component of Cord Set. Connect to Switch.
3	Black	22-09-1820	--	--	Component of PCBA. Connect to Switch.
4	Red	22-09-1820	--	--	Component of PCBA. Connect to C1 with wire #10.
5	White	22-09-1820	--	--	Component of PCBA. Connect to Switch.
6	White	22-09-1820	--	--	Component of PCBA. Connect to Switch.
7	Black	22-09-1820	--	--	Component of PCBA. Connect to Switch.
8	Black	18-07-0315	--	--	Component of Field. Connect to Switch.
9	Black	18-07-0315	--	--	Component of Field. Connect to Right Brush Assy.
10	Black	18-07-0315	--	--	Component of Field. Connect to C1 with wire #4.
11	Black	18-07-0315	--	--	Component of Field. Connect to Left Brush Assy.

BULK LEAD WIRE - BULLETIN 58-01-0003

NOTE:
All leads must be held to ± 1/16".
All lead lengths are before stripping.

TERMINAL DESCRIPTION		
Code	Part No.	Qnty.
CONNECTOR DESCRIPTION		
C1	22-56-0150	1